August, 2008

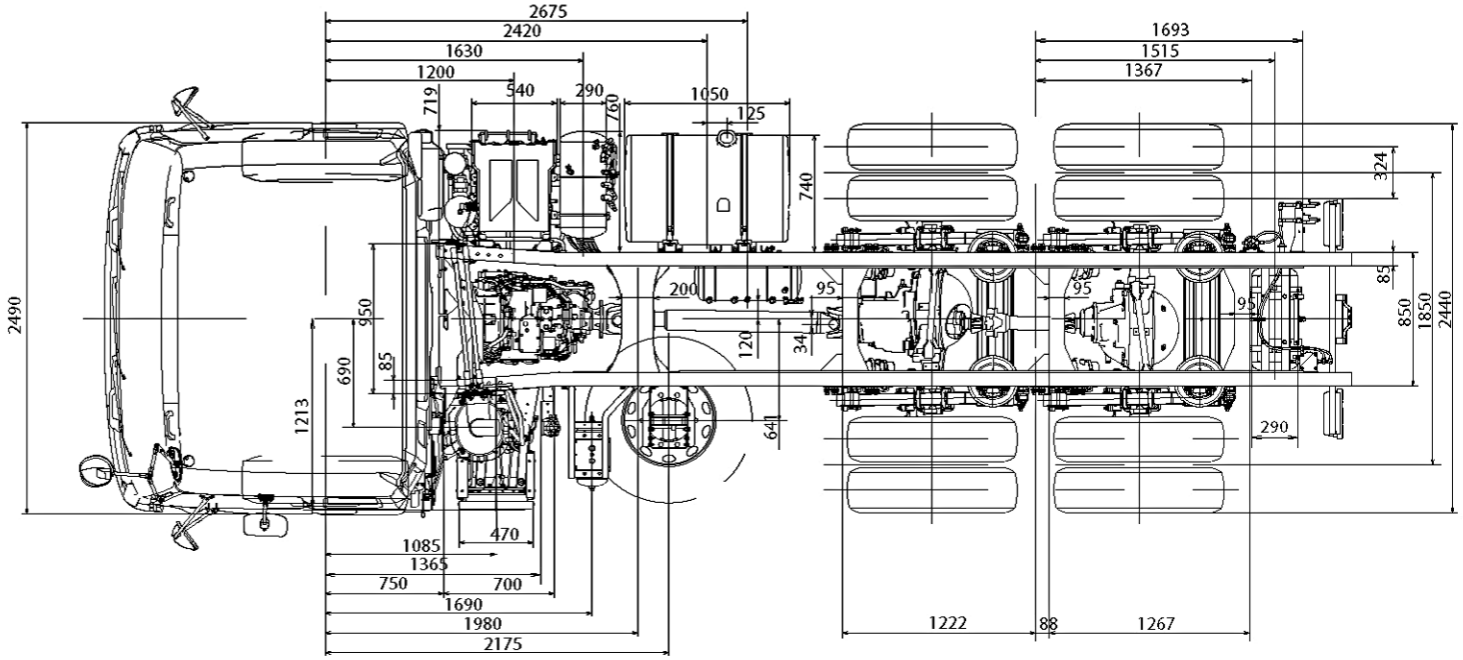

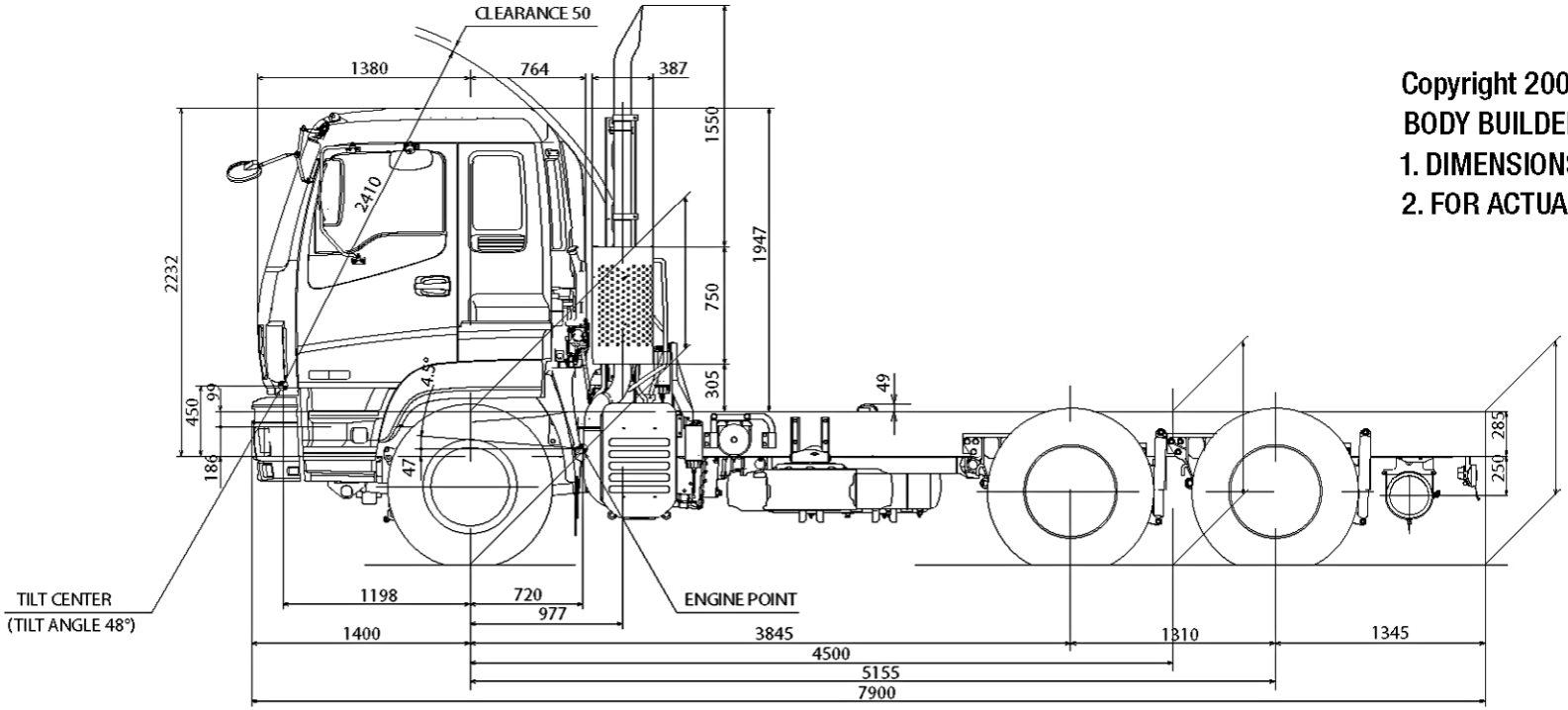

Copyright 2008 Isuzu Australia Limited

BODY BUILDER NOTES:

1. DIMENSIONS SHOWN ARE INDICATIVE ONLY
2. FOR ACTUAL DIMENSIONS REFER TO VEHICLE

2008 Isuzu CH- Giga CXY 455 Premium