NPS75U–HJ5VAYHN

Copyright 2010 Isuzu Australia Limited

BODY BUILDER NOTES:

1. DIMENSIONS SHOWN ARE INDICATIVE ONLY
2. FOR ACTUAL DIMENSIONS REFER TO VEHICLE

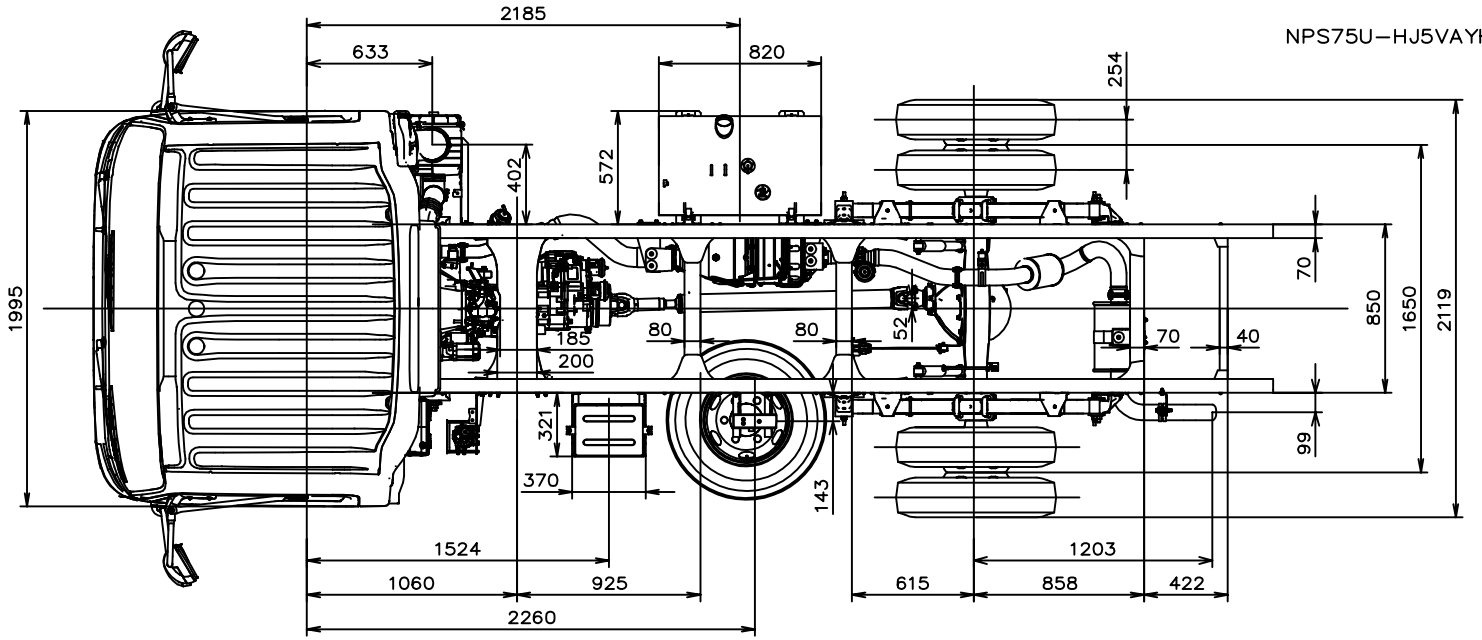

CHASSIS HEIGHTS (unladen):
X=865mm
Y=950mm
Z=975mm

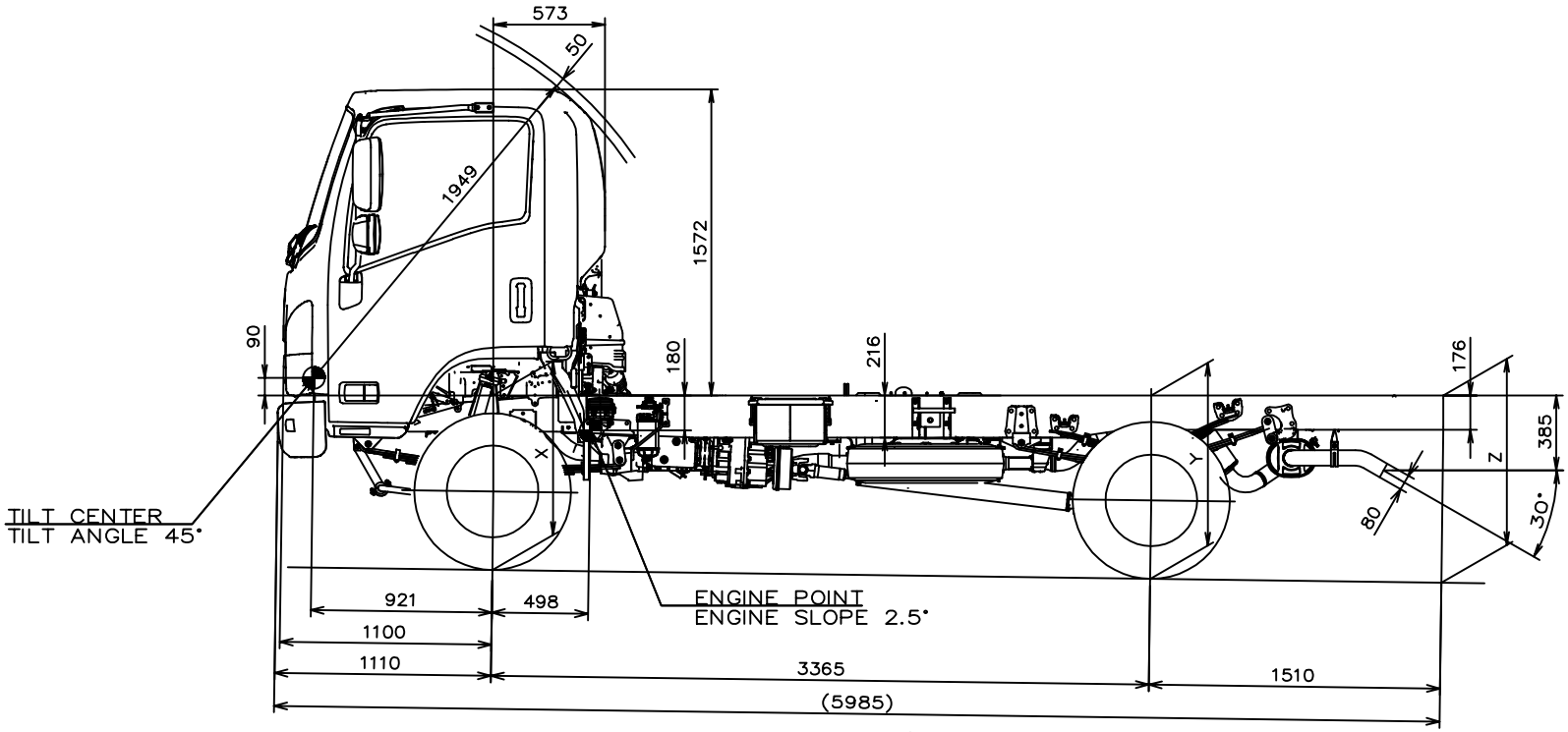

NH 2011MY Isuzu NPS 250/300 4x4

Version 1, November 2010