Copyright 2010 Isuzu Australia Limited

BODY BUILDER NOTES:

1. DIMENSIONS SHOWN ARE INDICATIVE ONLY
2. FOR ACTUAL DIMENSIONS REFER TO VEHICLE

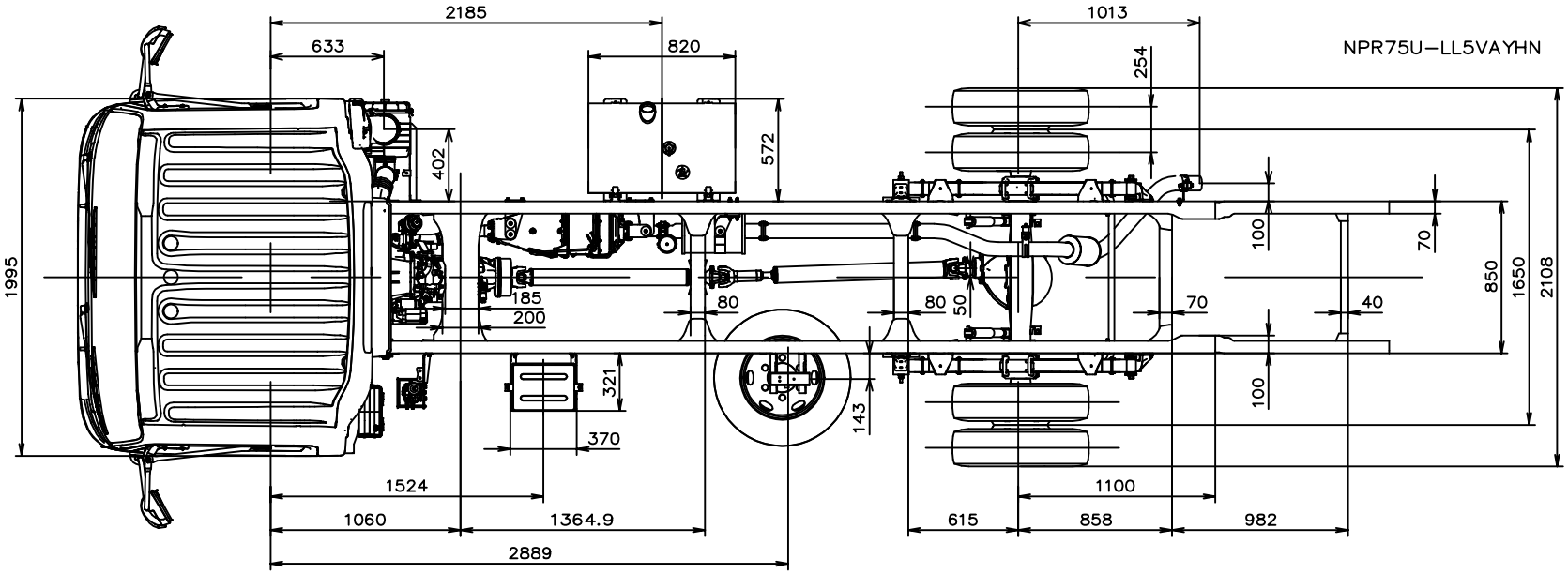

CHASSIS HEIGHTS (unladen):
X=675mm
Y=790mm
Z=845mm

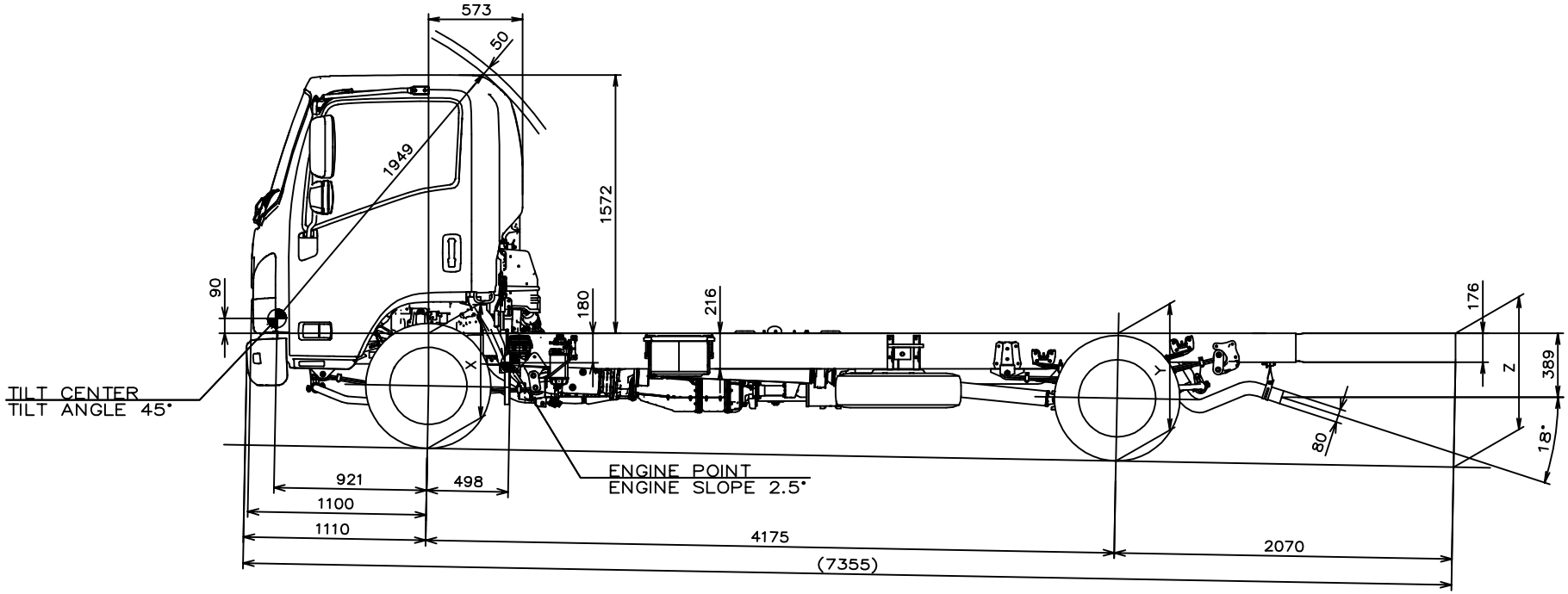

NH 2011MY Isuzu NPR 400 long

Version 1, November 2010