NPR75U–LJ5VWYHN

Copyright 2010 Isuzu Australia Limited

BODY BUILDER NOTES:

1. DIMENSIONS SHOWN ARE INDICATIVE ONLY
2. FOR ACTUAL DIMENSIONS REFER TO VEHICLE

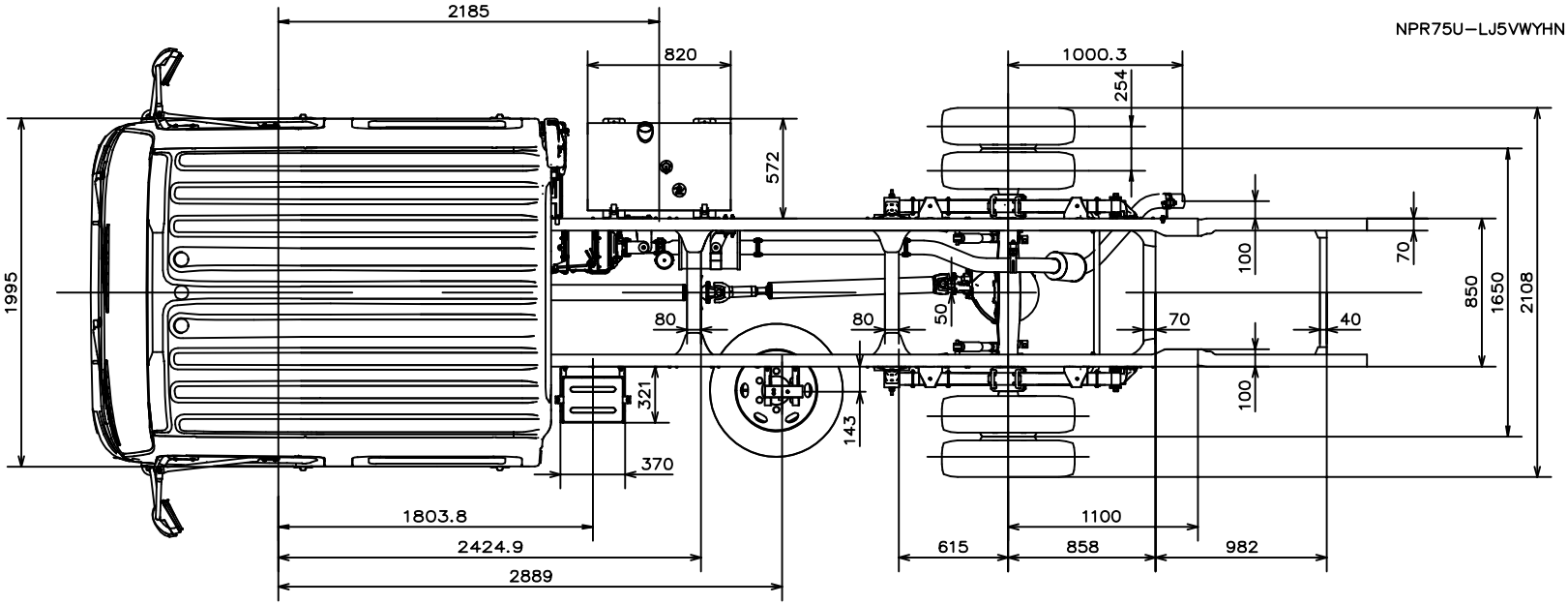


CHASSIS HEIGHTS (unladen):
X=660mm
Y=800mm
Z=860mm

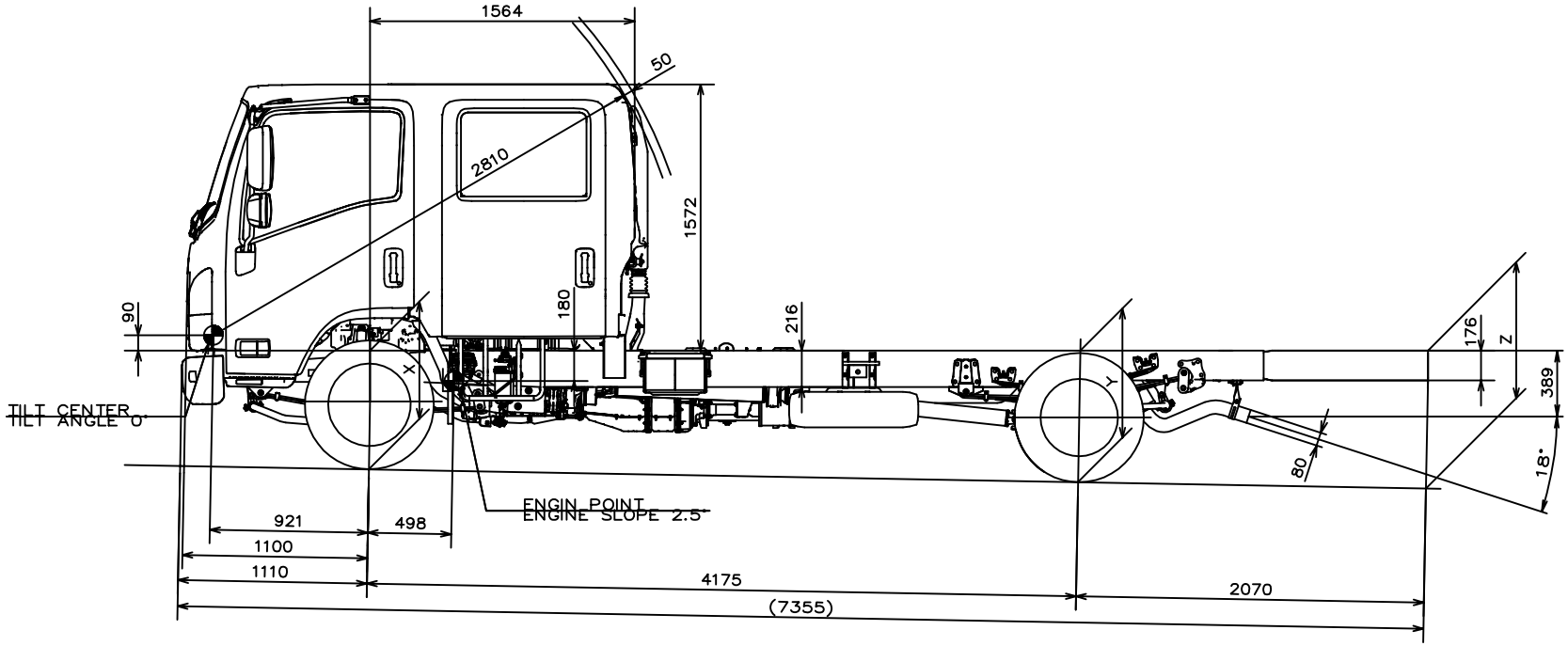


# NH 2011MY Isuzu NPR 250/300 crew

Version 1, November 2010