NPR75U–HH5VAYHN

Copyright 2010 Isuzu Australia Limited

BODY BUILDER NOTES:

1. DIMENSIONS SHOWN ARE INDICATIVE ONLY
2. FOR ACTUAL DIMENSIONS REFER TO VEHICLE

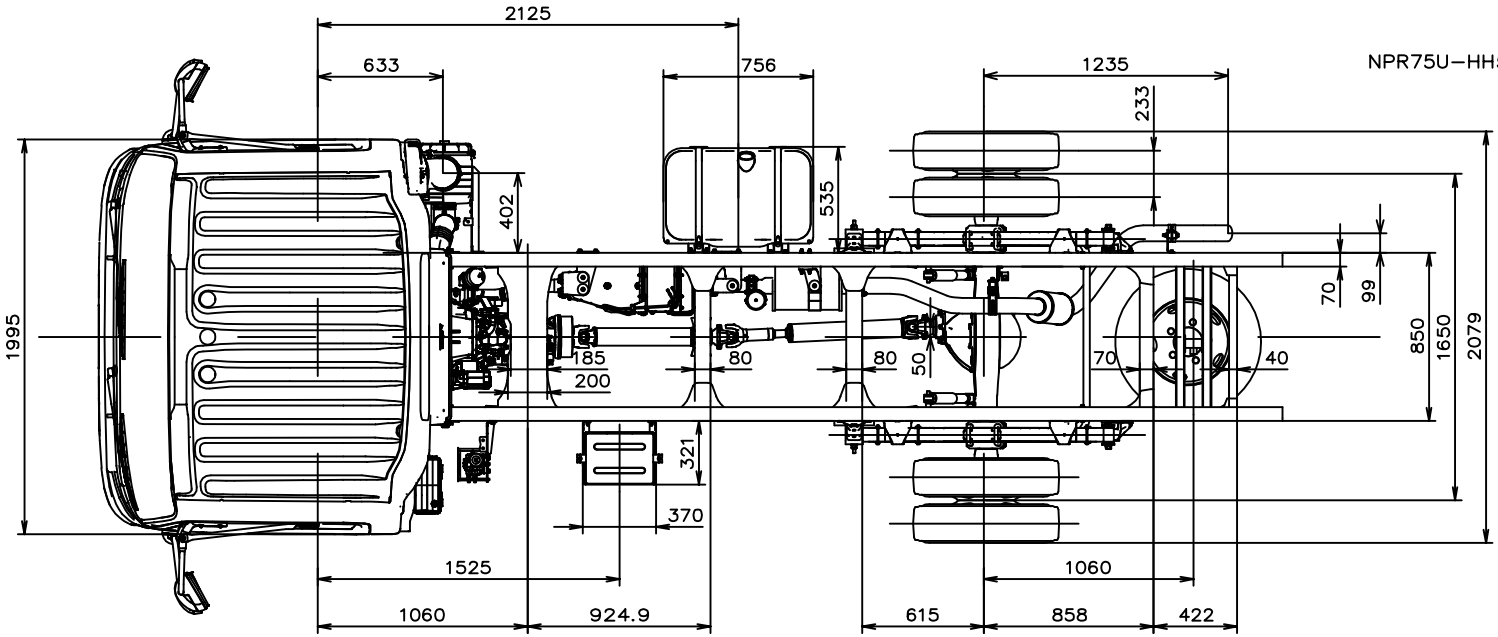

CHASSIS HEIGHTS (unladen):
X=640mm
Y=750mm
Z=785mm

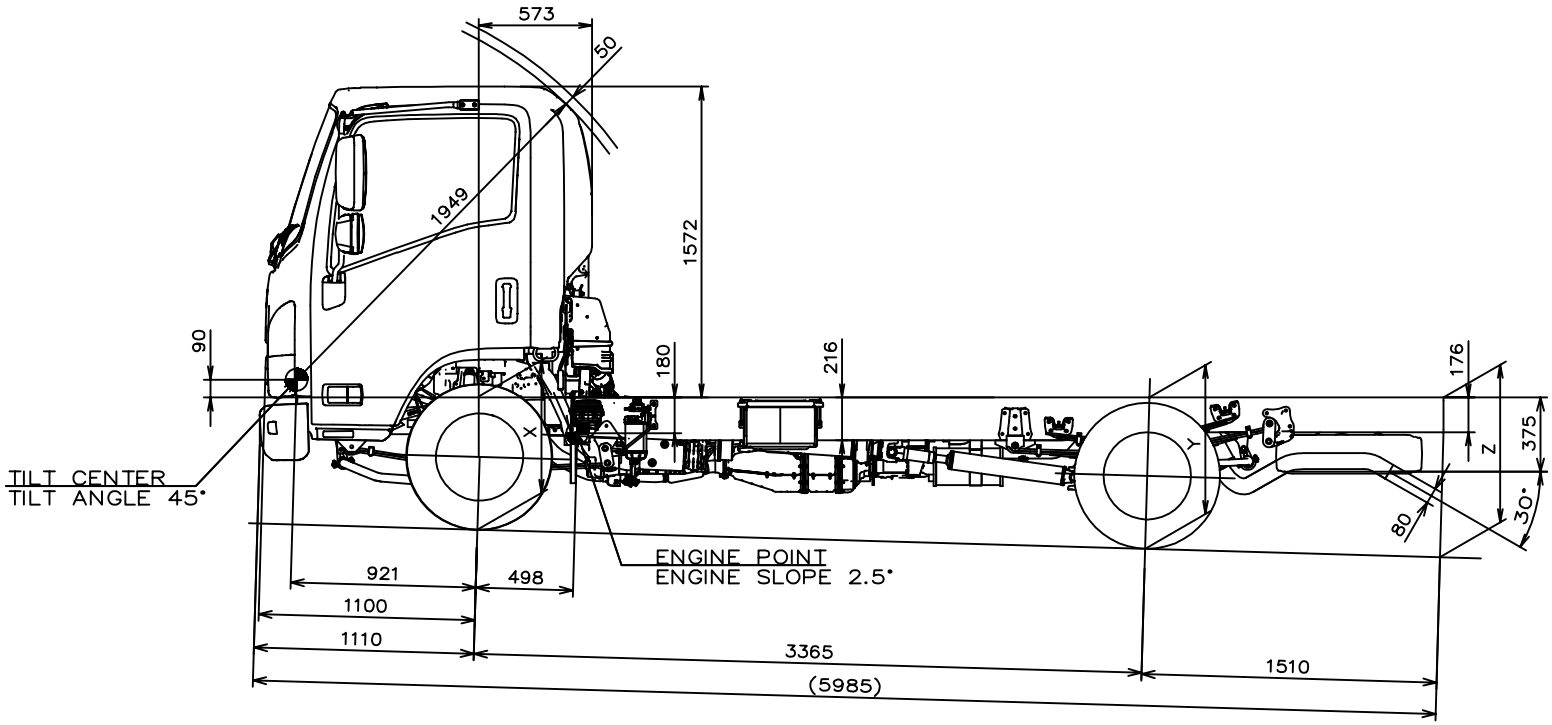

NH 2011MY Isuzu NPR 200/275 medium

Version 1, November 2010