Copyright 2010 Isuzu Australia Limited

BODY BUILDER NOTES:

1. DIMENSIONS SHOWN ARE INDICATIVE ONLY
2. FOR ACTUAL DIMENSIONS REFER TO VEHICLE

NLS85AU–FE5AYH

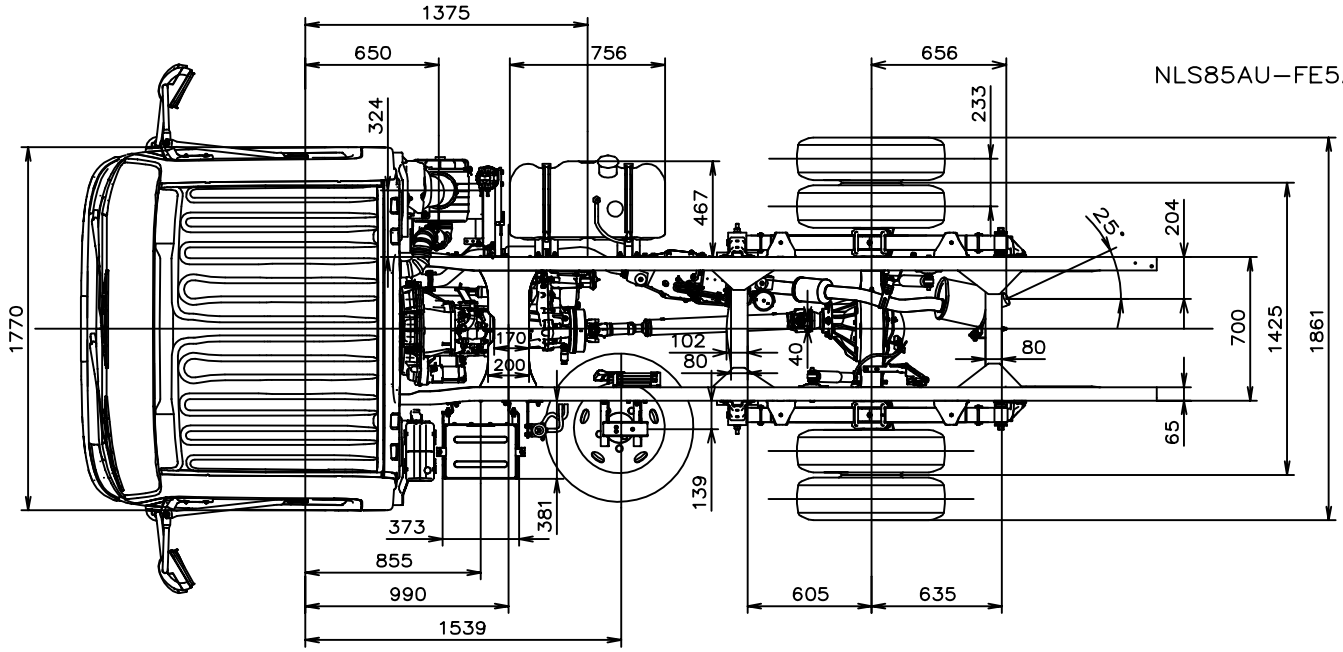

CHASSIS HEIGHTS (unladen):
X=640mm
Y=750mm
Z=810mm

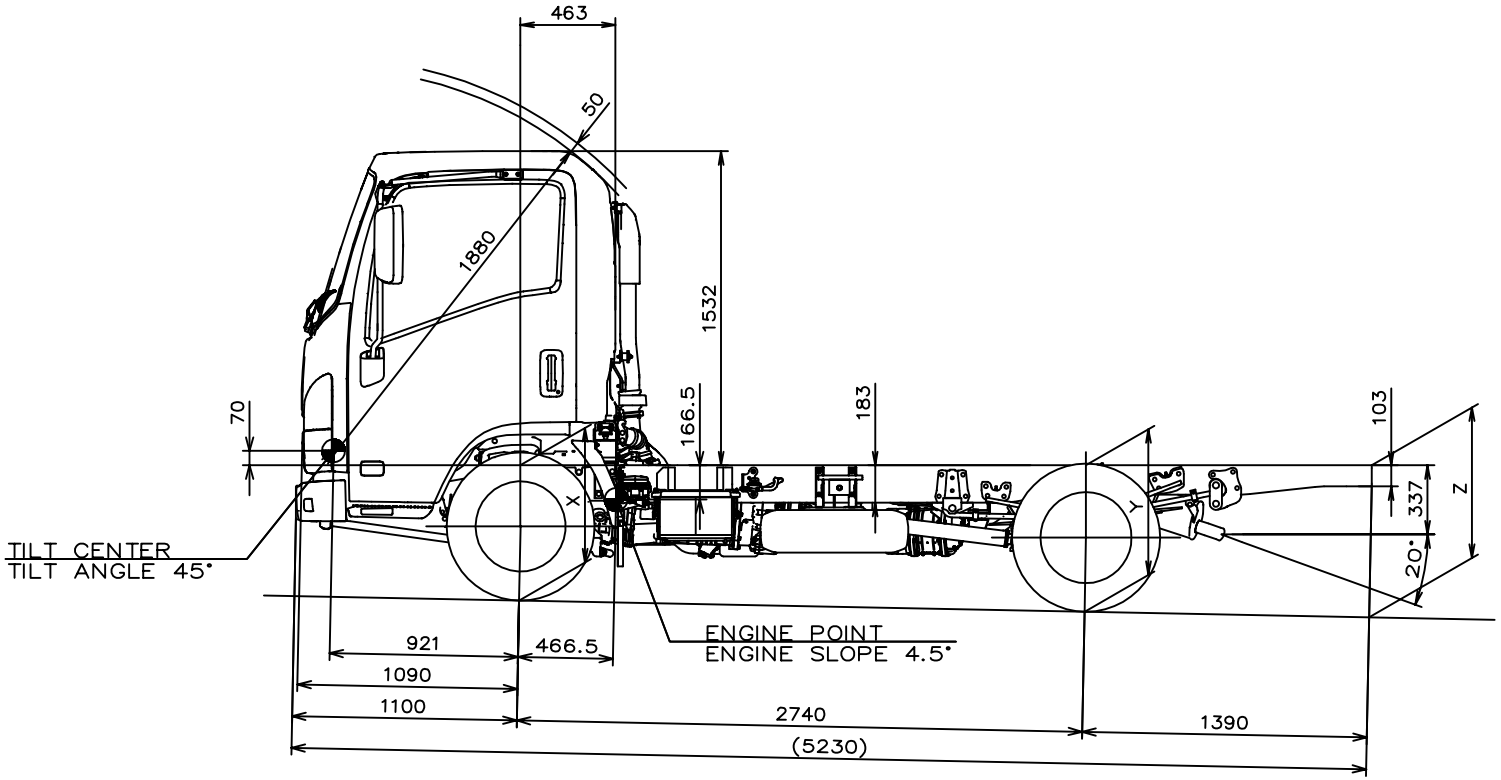

NH 2011MY Isuzu NLS 200 AWD

Version 1, November 2010