Copyright 2010 Isuzu Australia Limited

BODY BUILDER NOTES:

1. DIMENSIONS SHOWN ARE INDICATIVE ONLY
2. FOR ACTUAL DIMENSIONS REFER TO VEHICLE

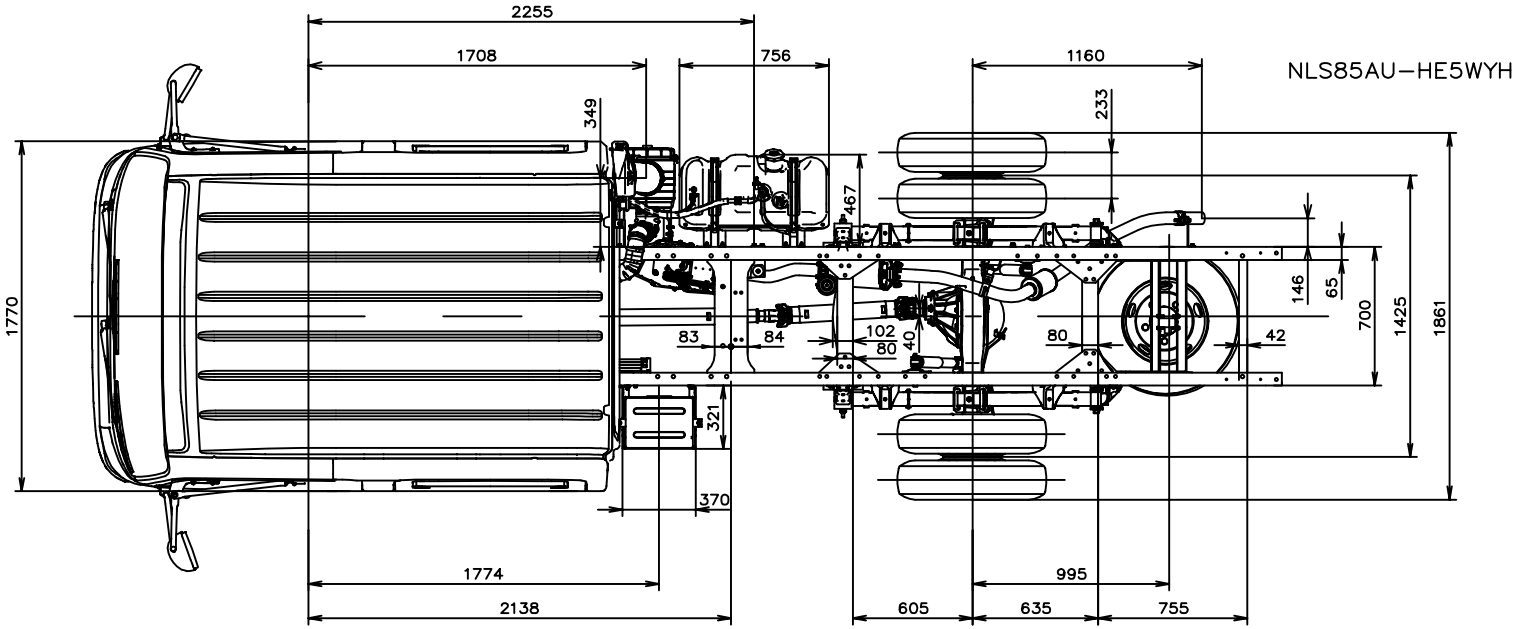

CHASSIS HEIGHTS (unladen):
X=TBAmm
Y=TBAmm
Z=TBAmm

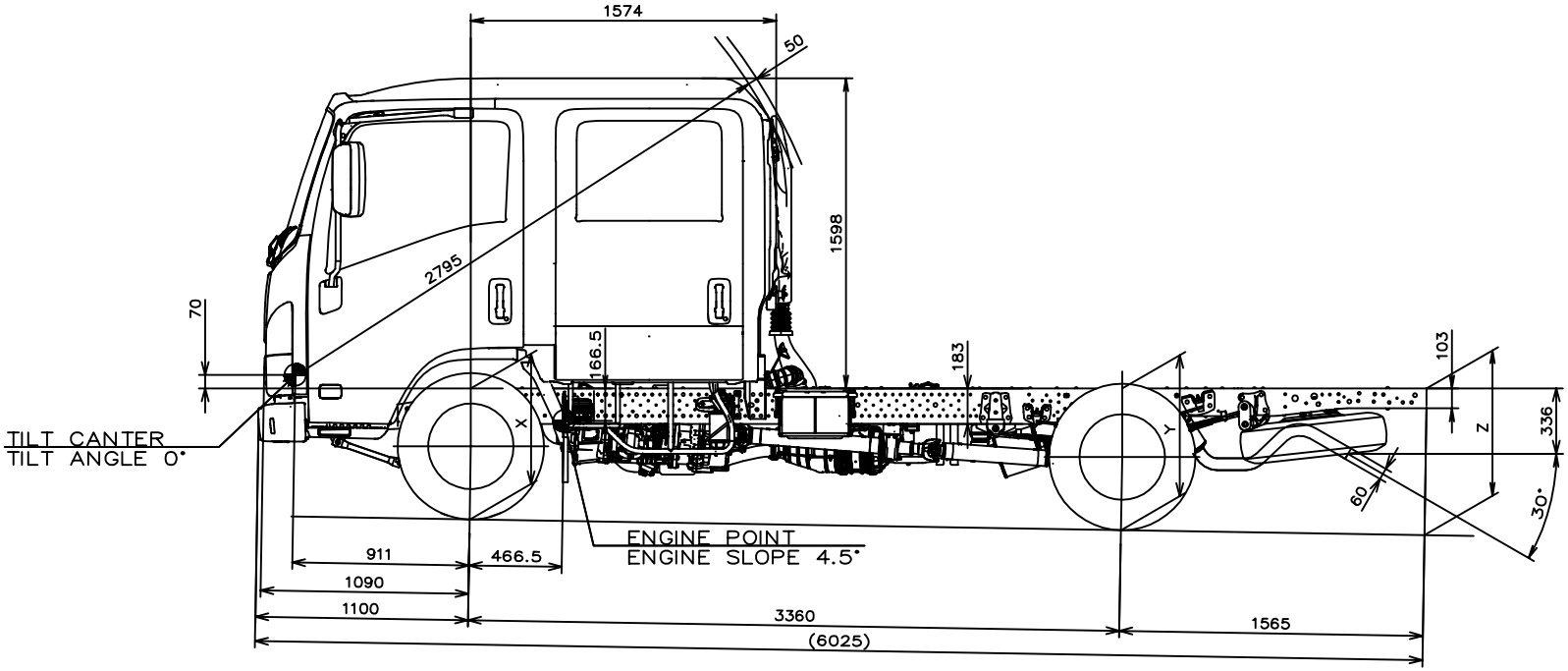

NH 2011MY Isuzu NLS 200 AWD crew

Version 1, November 2010