FTS34SU–LYHN

Copyright 2010 Isuzu Australia Limited

BODY BUILDER NOTES:

1. DIMENSIONS SHOWN ARE INDICATIVE ONLY
2. FOR ACTUAL DIMENSIONS REFER TO VEHICLE

CHASSIS HEIGHTS (unladen):
X=1095mm
Y=1160mm
Z=1195mm

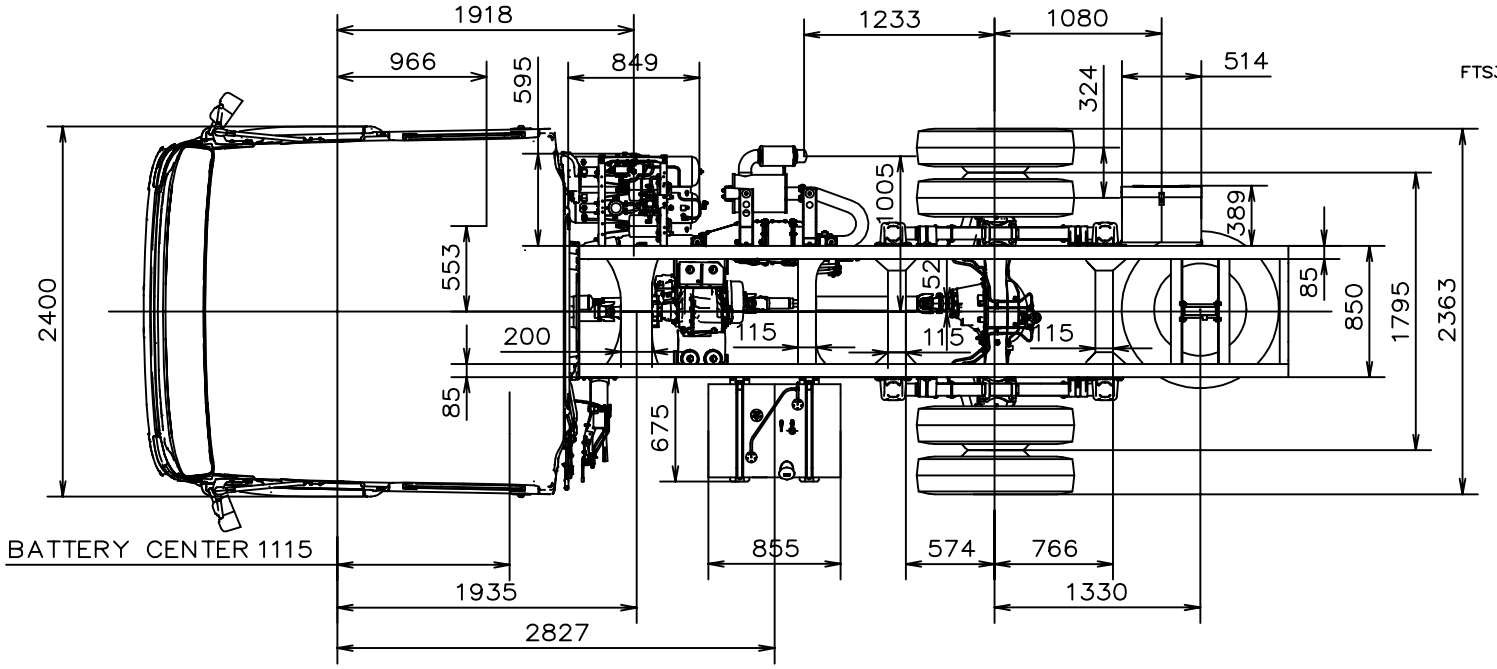

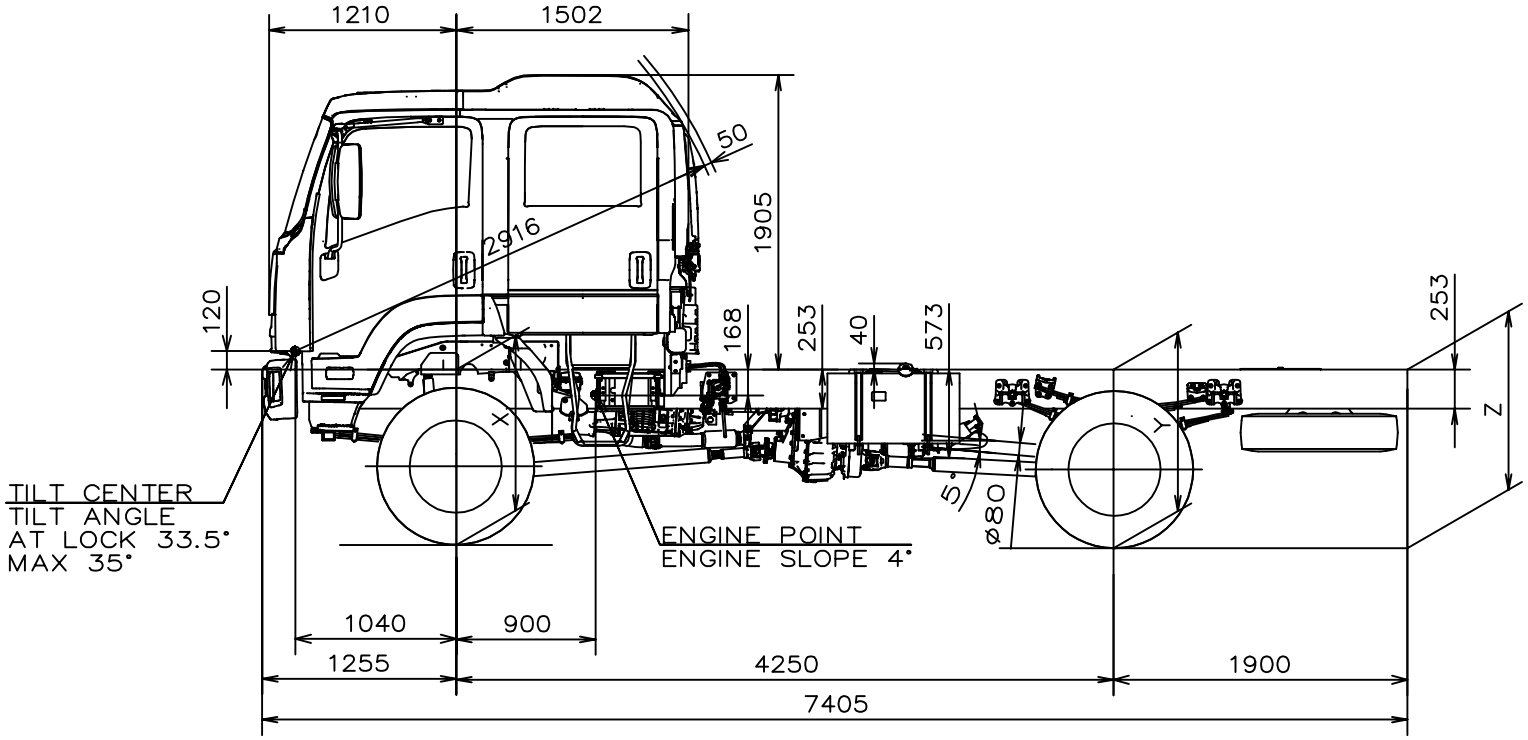

FH 2011MY Isuzu FTS 800 4x4 crew

Version 1, November 2010