Copyright 2010 Isuzu Australia Limited

BODY BUILDER NOTES:

1. DIMENSIONS SHOWN ARE INDICATIVE ONLY
2. FOR ACTUAL DIMENSIONS REFER TO VEHICLE

CHASSIS HEIGHTS (unladen):
X=715mm
Y=890mm
Z=960mm

FRR34SU-QCHN

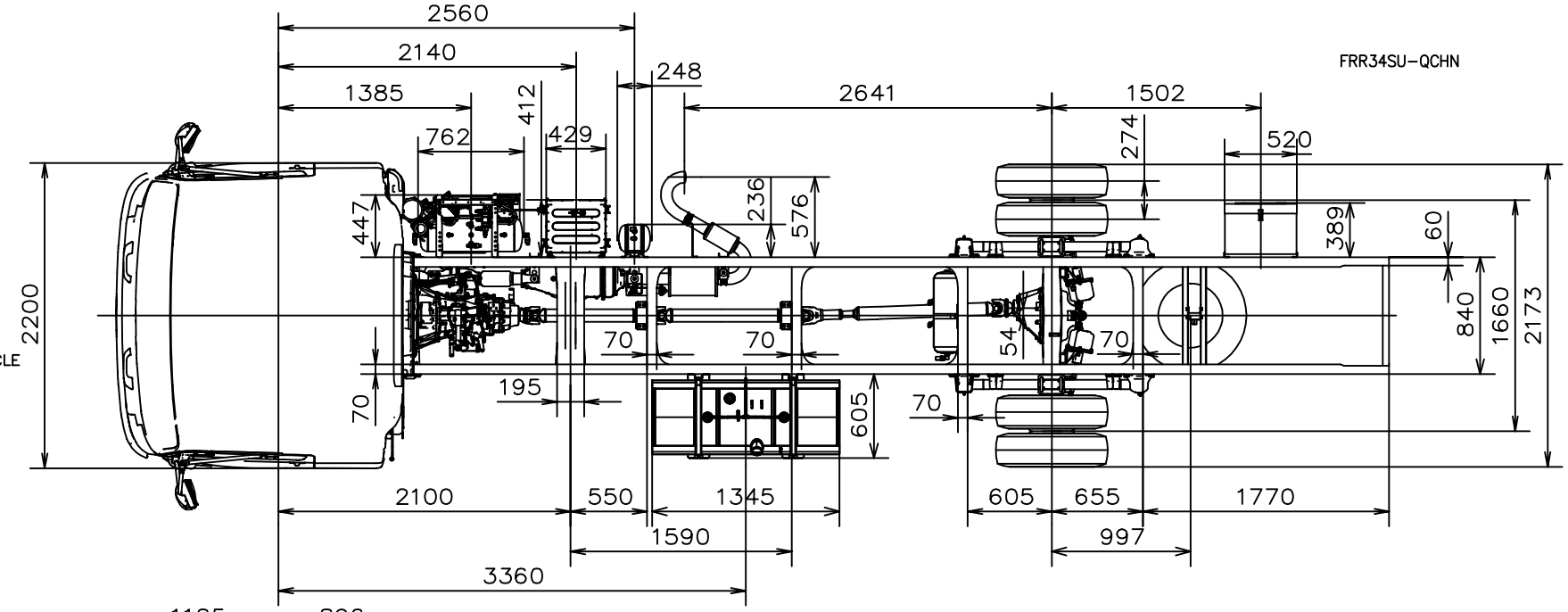

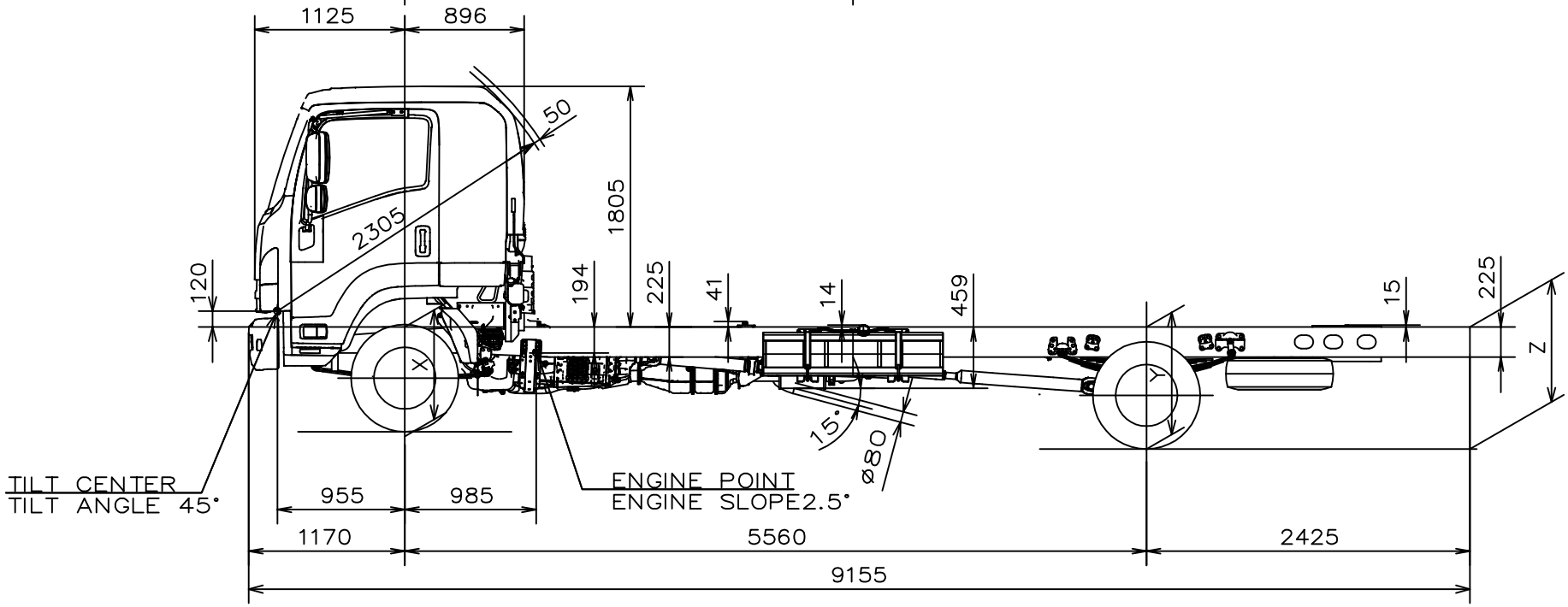

FH 2011MY Isuzu FRR 600 x-long

Version 1, November 2010