Copyright 2010 Isuzu Australia Limited

BODY BUILDER NOTES:

1. DIMENSIONS SHOWN ARE INDICATIVE ONLY
2. FOR ACTUAL DIMENSIONS REFER TO VEHICLE

CHASSIS HEIGHTS (unladen):
X=740mm
Y=905mm
Z=970mm

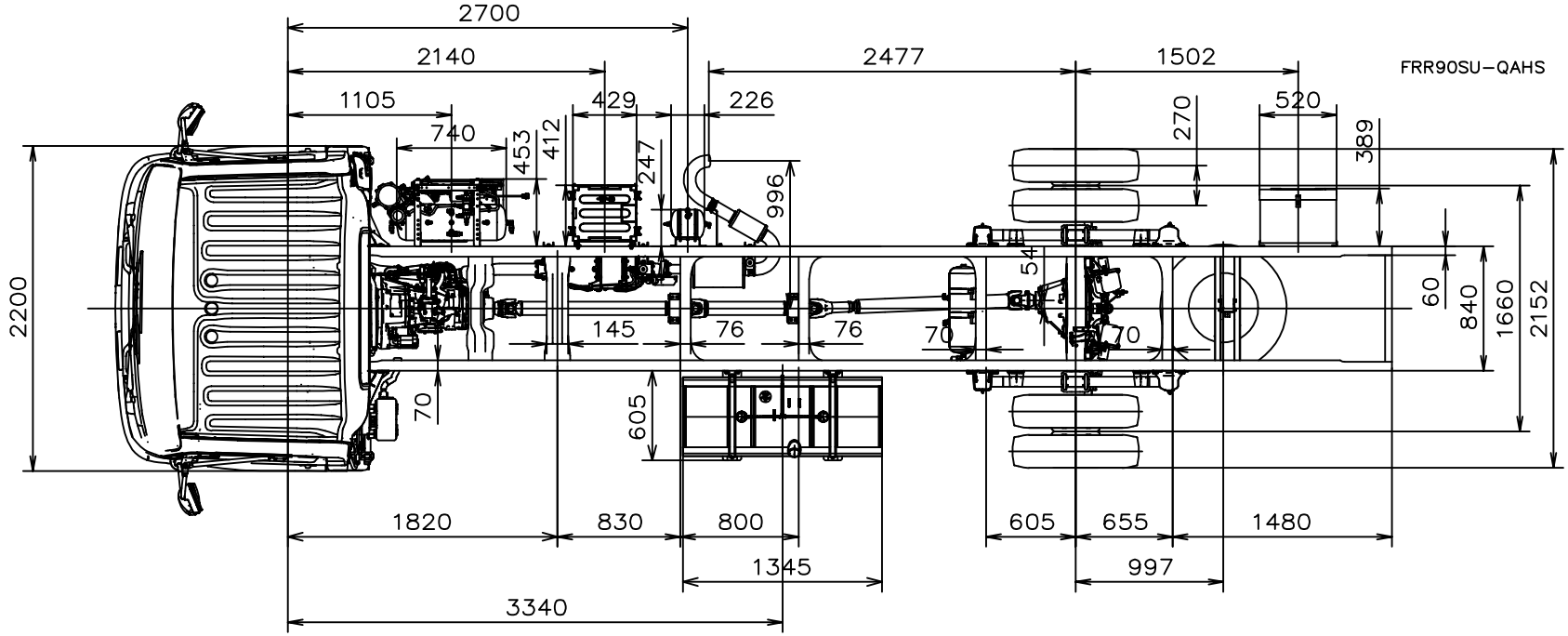

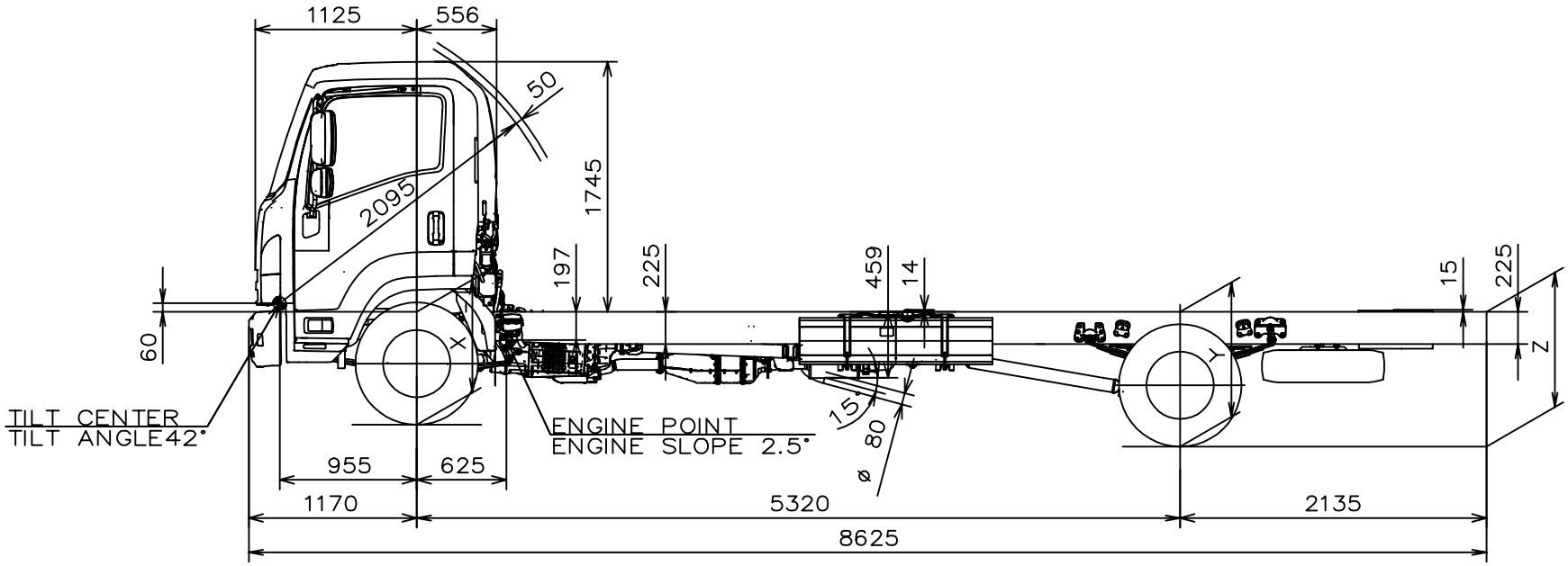

FH 2011MY Isuzu FRR 500 x-long

Version 1, November 2010