Copyright 2010 Isuzu Australia Limited

BODY BUILDER NOTES:

1. DIMENSIONS SHOWN ARE INDICATIVE ONLY
2. FOR ACTUAL DIMENSIONS REFER TO VEHICLE

CHASSIS HEIGHTS (unladen):
X=750mm
Y=925mm
Z=980mm

FRR90SU-JAHS
(MIXER)

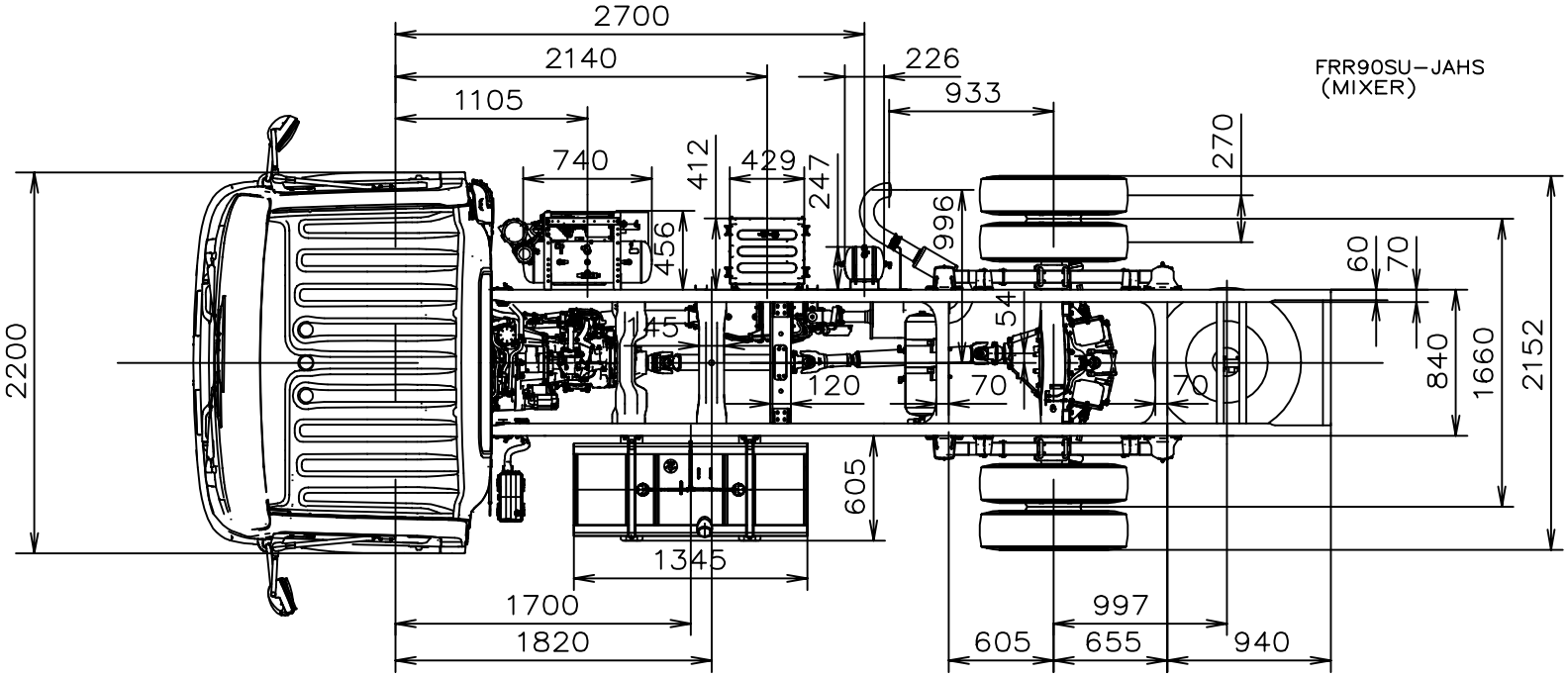

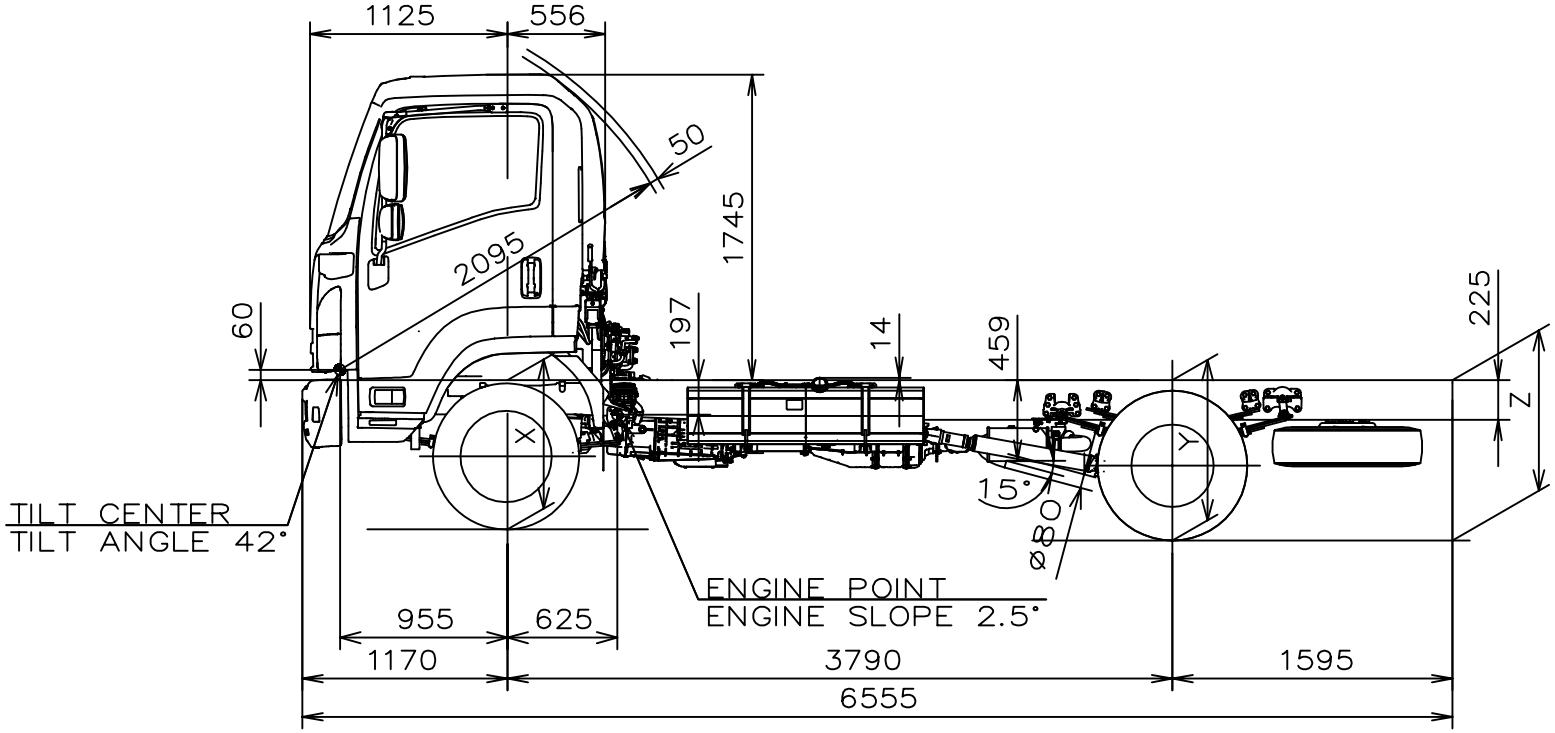

FH 2011MY Isuzu FRR 500 PTO

Version 1, November 2010