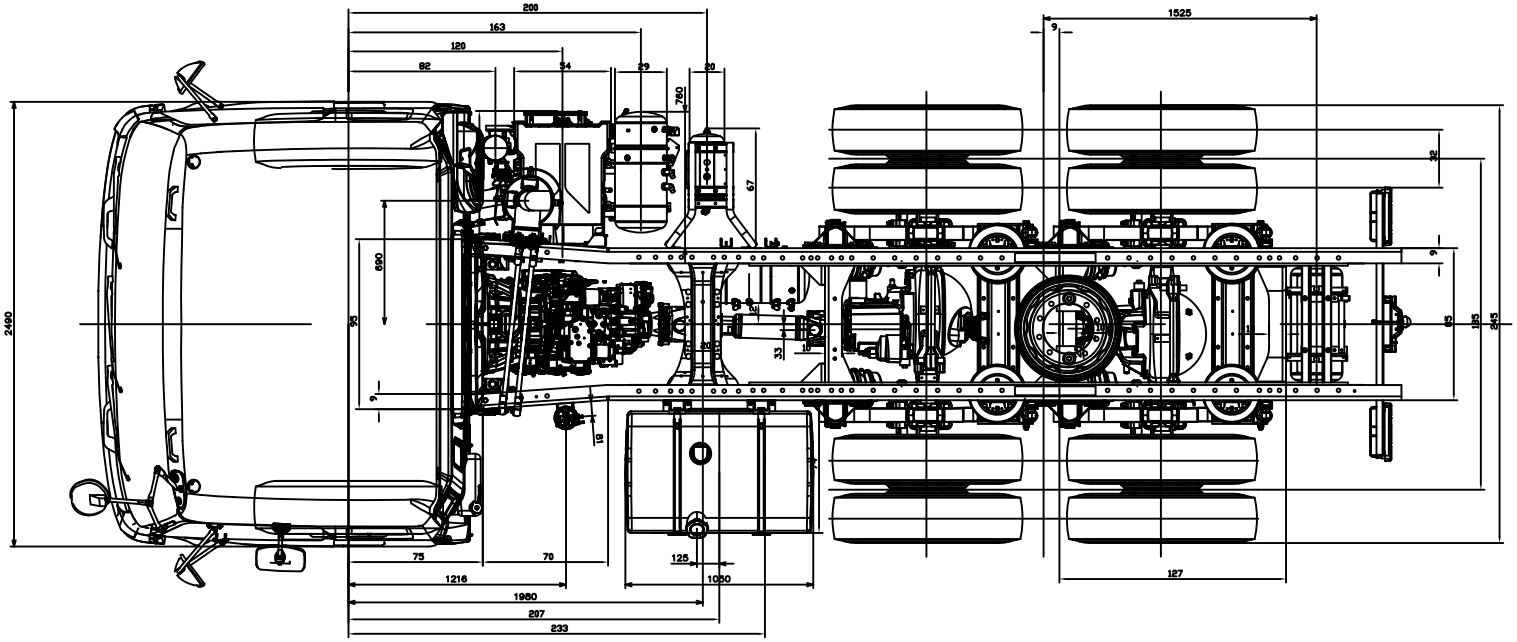

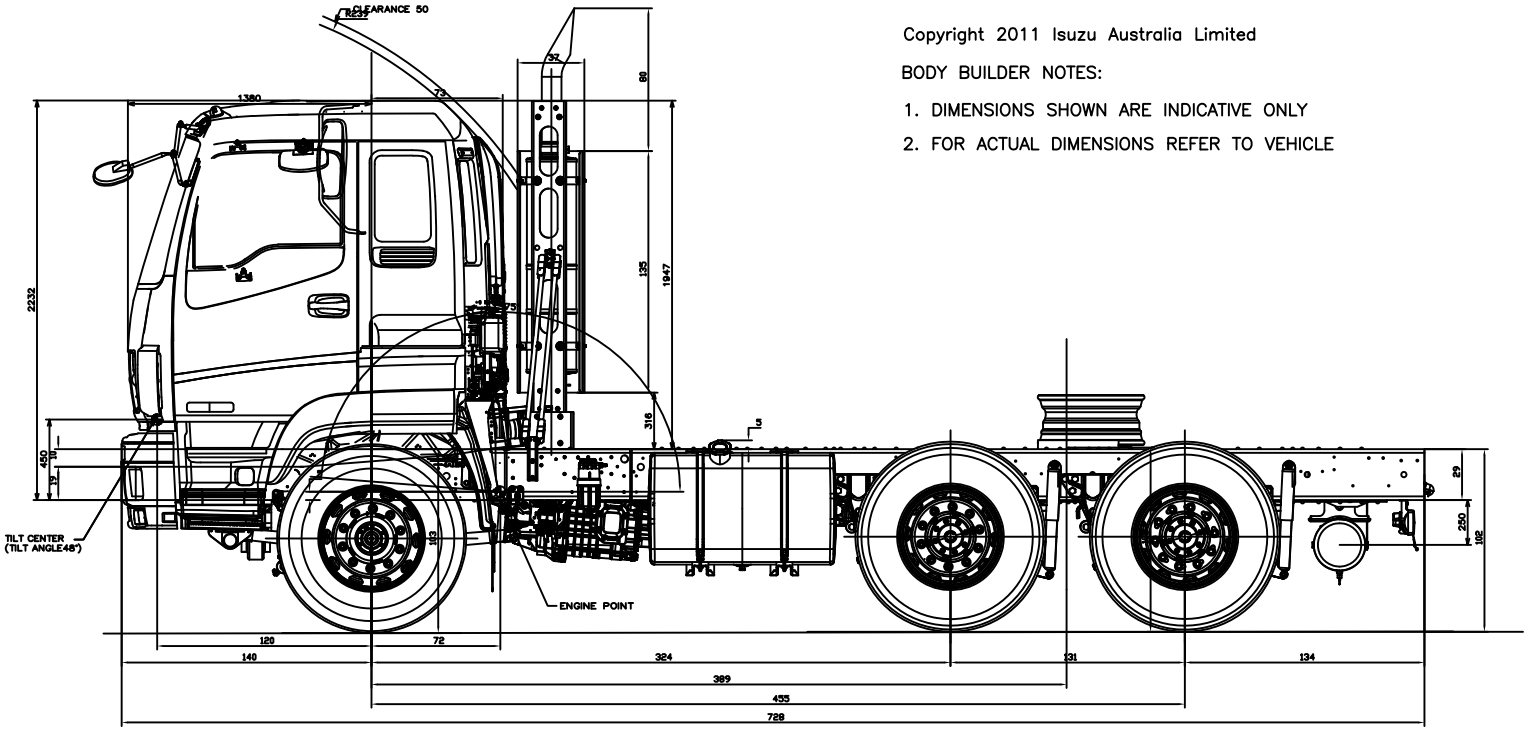

Copyright 2011 Isuzu Australia Limited

BODY BUILDER NOTES:

1. DIMENSIONS SHOWN ARE INDICATIVE ONLY
2. FOR ACTUAL DIMENSIONS REFER TO VEHICLE

CH 2011MY Isuzu Giga CXY 415 short premium highway

Version 1, August 2011